Basic Doorbell Project

with XBee 802.15.4

Rob Faludi
http://faludi.com

Ding, Dong!

Basic Doorbell

XBee Direct: no external microcontrollers:

1. doorbell switch connected to an XBee radio

2. buzzer connected to another XBee radio sounds the alert

3. someone’s at the door!

Background

I/O Intro

- For simple input and/or output
- Eight digital input/outputs
- One additional digital output
- Seven analog inputs
- Two analog outputs
- But <u>not all at once</u>! Pins are shared.

I/O Why

- Why:
  - Save space, save power, save weight and save money
  - Reduce complications for simple projects
- Why not:
  - Limited inputs/outputs
  - No access to logic
  - Might make complicated projects even more complicated

Input/Output Wiring

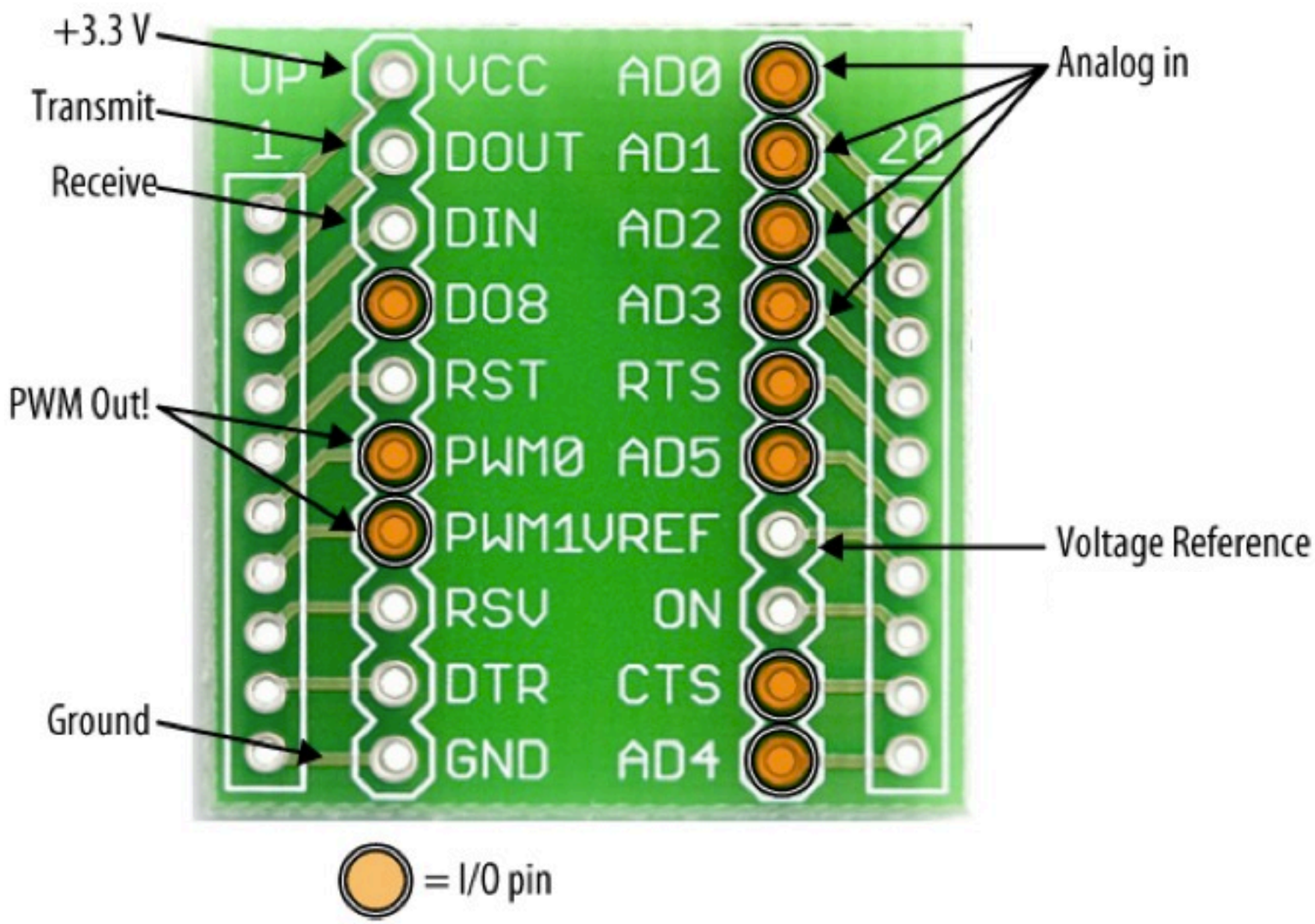

I/O AT Commands

- ATD0...D8 -> configure pins for I/O
- ATIR -> sample rate
- ATIT -> samples before transmit
- ATP0...P1 -> PWM configuration
- ATIA -> I/O input address

Setting I/O Pins

- ATDx 0 Disabled
- ATDx 1 Built-in Function (sometimes)
- ATDx 2 Analog Input (sometimes)
- ATDx 3 Digital Input
- ATDx 4 Digital Output, low to start with
- ATDx 5 Digital Output, high to start with
  - ...so ATD32 would set digital pin 3 to analog input mode

Basic Doorbell Project

Button Schematic

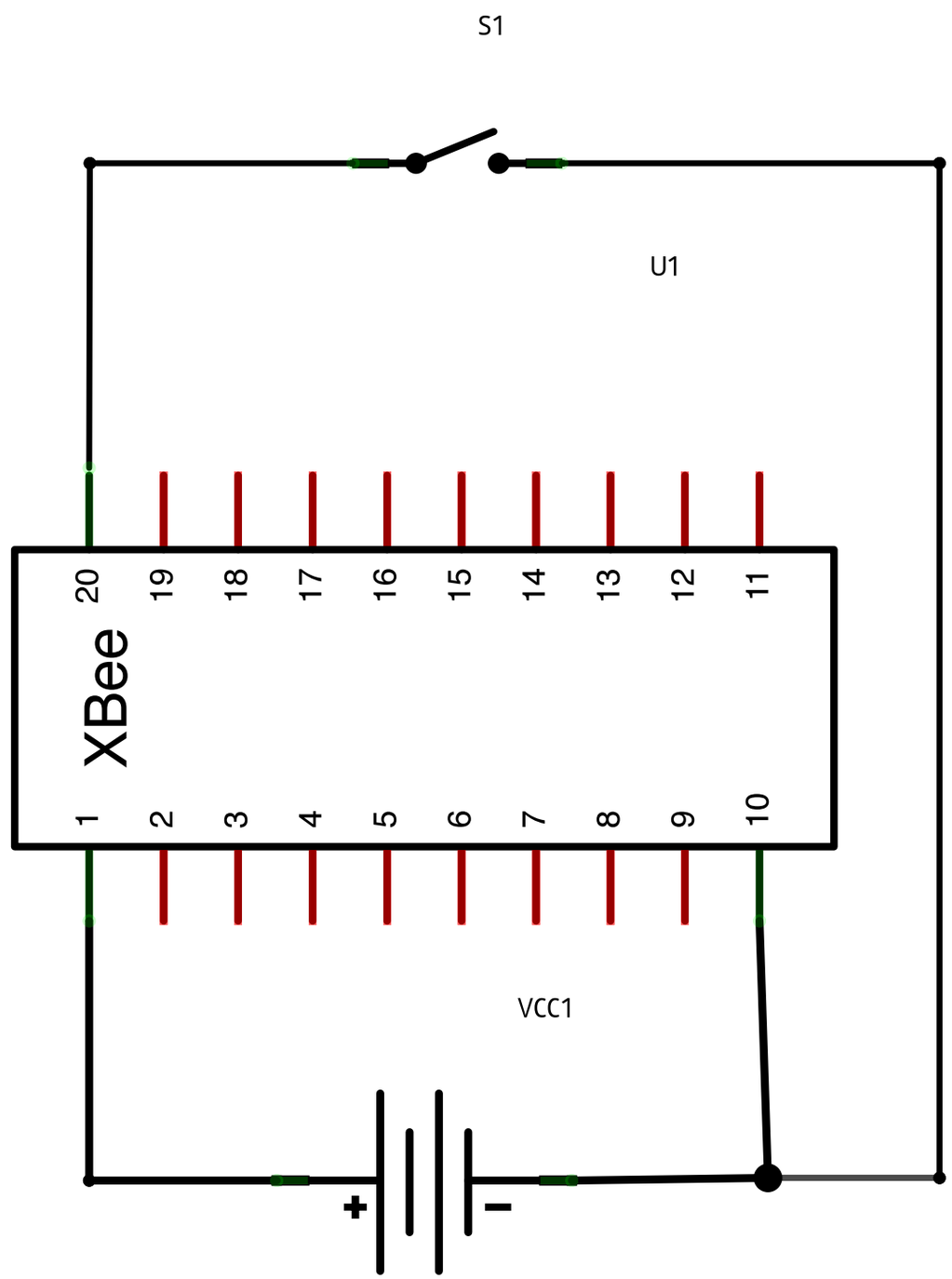

Button Breadboard

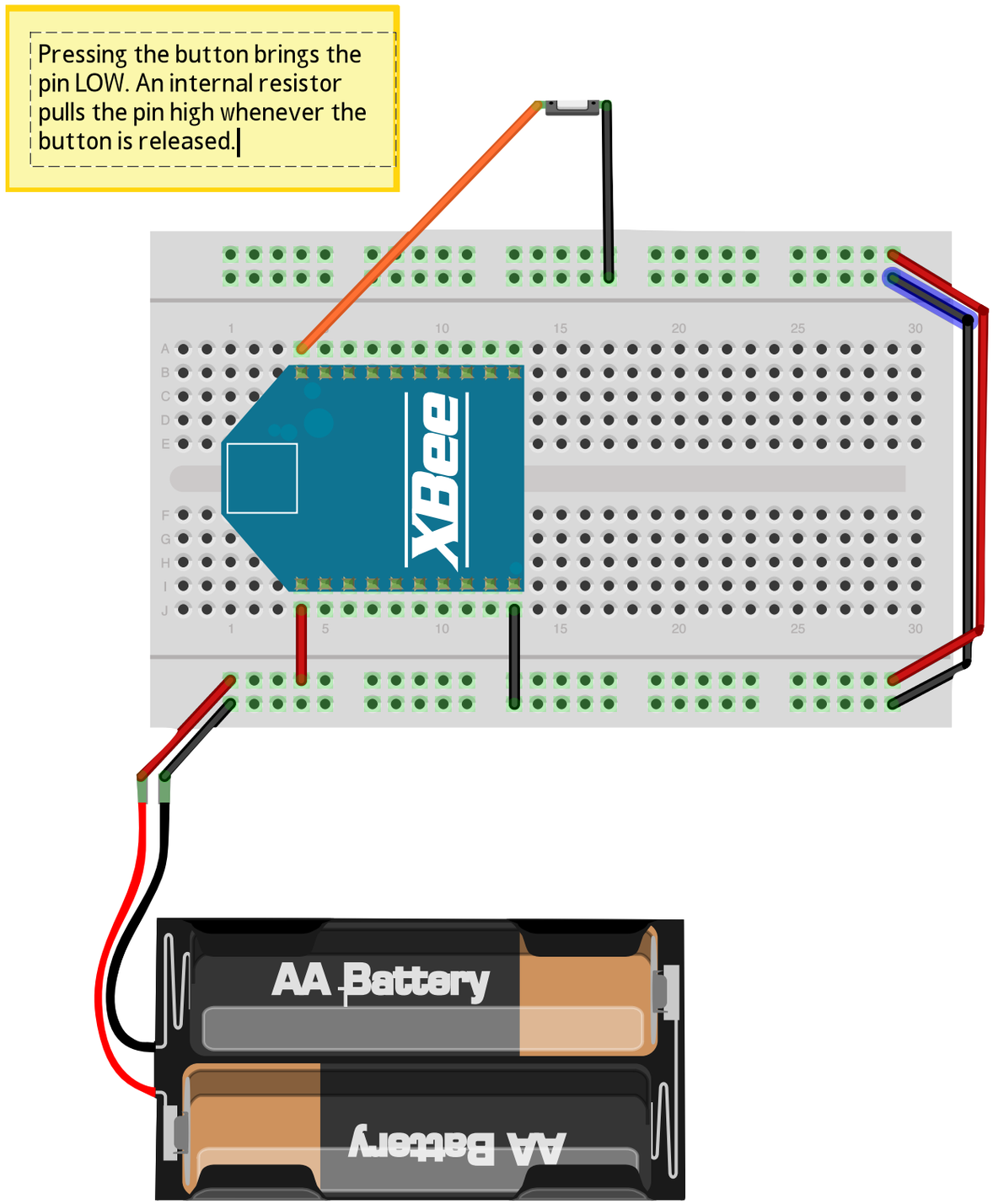

Buzzer Schematic

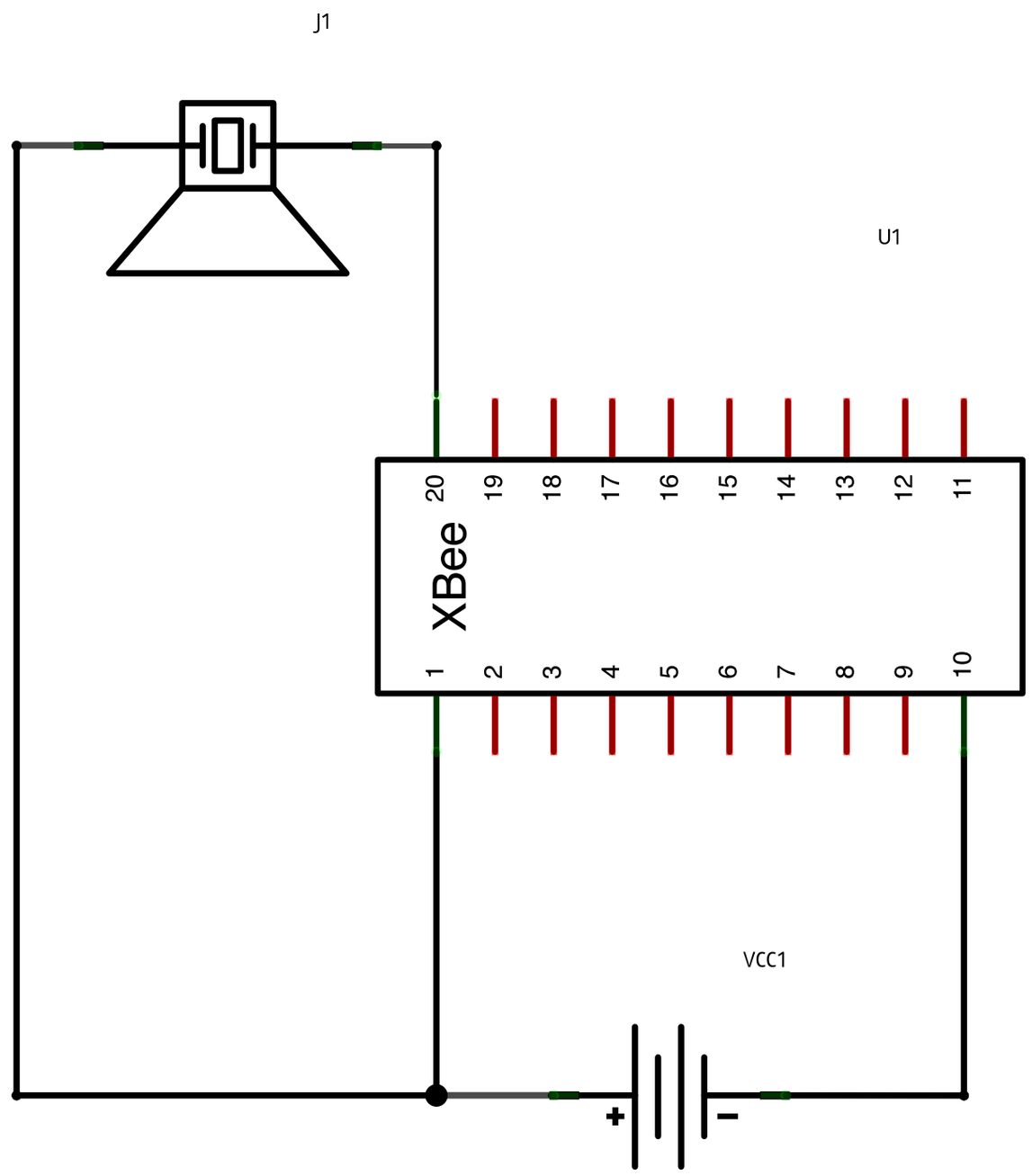

Buzzer Breadboard

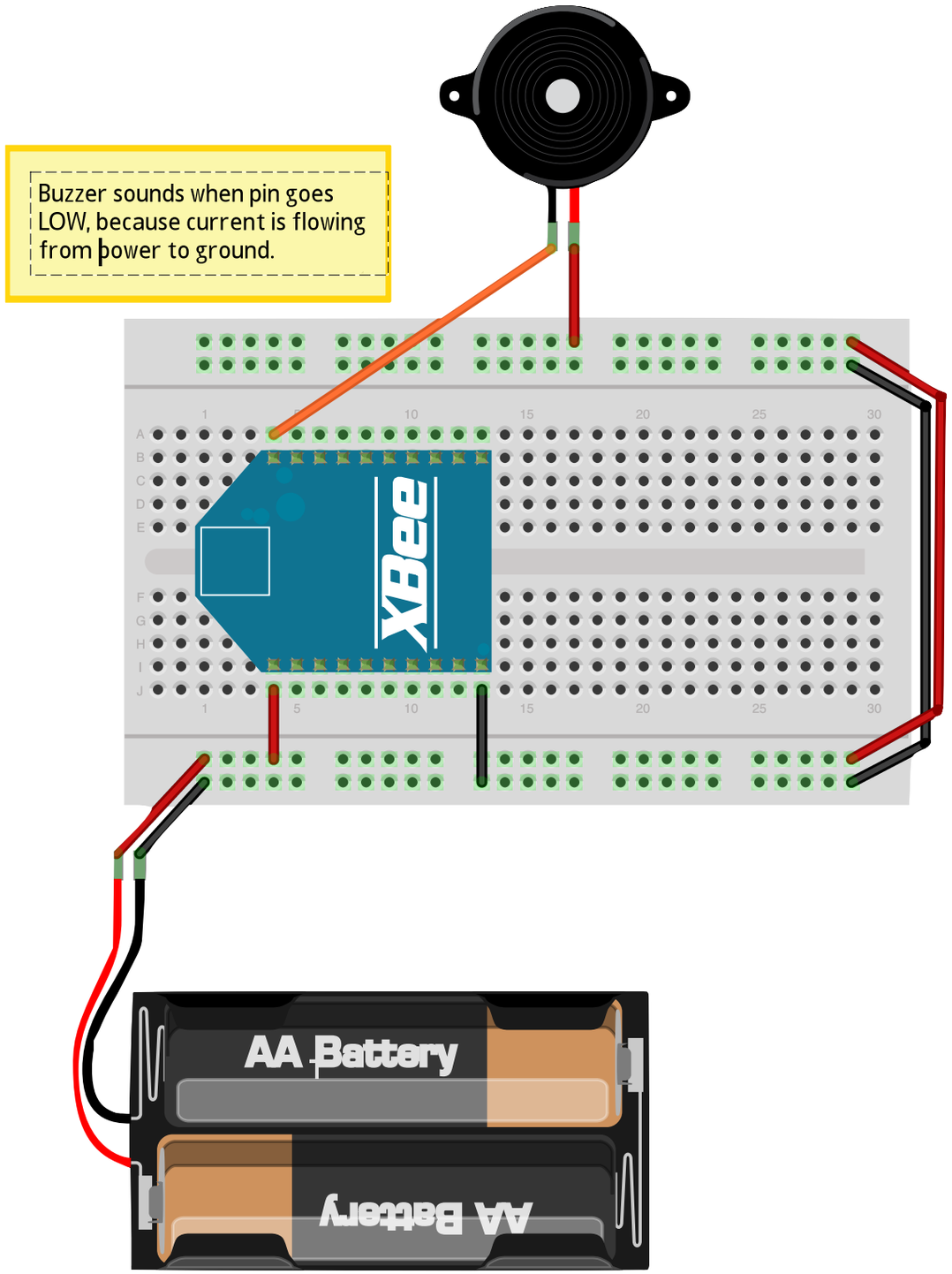

Setup Strings

- Button XBee:
  - ATRE,ID*3001*,MY1,DL2,IR64,IT1,D03,IAFFFF,WR
- Buzzer XBee:
  - ATRE,ID*3001*,MY2,DL1,IR64,IT1,D05,IAFFFF,WR
    - *** be sure to change *3001* to your own PAN ID!!

Addressing

- ATRE
  resets to factory settings

- ATID
  sets the PAN ID (choose your own)

- ATMY
  sets the local radio’s address

- ATDL
  sets the destination address

Input/Output Settings

- ATIR
  sets the data sample rate (uses hexadecimal notation)

- ATIT
  how many samples transmitted at a time

- ATD0
  mode for digital pin zero (3=digital input, 5=digital output)

- ATIA
  remote address that’s allowed to control local pins

- ATWR
  writes the settings to firmware (like saving to a disk)

CoolTerm

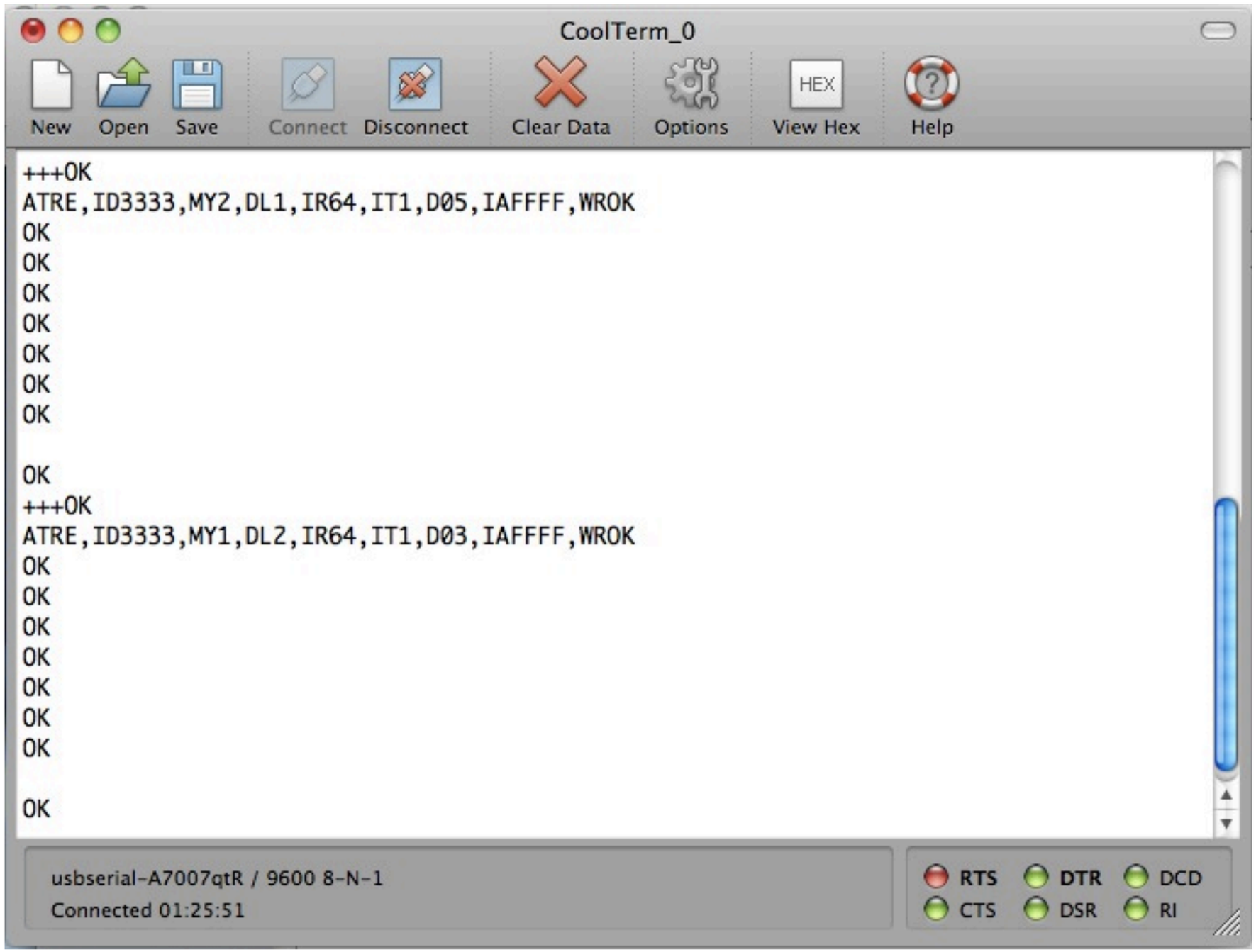
CoolTerm_0
New
Open
Save
Connect
Disconnect
Clear Data
Options
HEX
View Hex
Help
+++OK
ATRE,ID3333,MY2,DL1,IR64,IT1,D05,IAFFFF,WROK
OK
OK
OK
OK
OK
OK
OK
OK
OK
+++OK
ATRE,ID3333,MY1,DL2,IR64,IT1,D03,IAFFFF,WROK
OK
OK
OK
OK
OK
OK
OK
OK
usbserial-A7007qtR / 9600 8-N-1
Connected 01:25:51
RTS
DTR
DCD
CTS
DSR
RI

More

- Got it already?
  - Try going the other way: a light for “I’ll be right there” feedback.
    - remember that input and output pins are paired and mirrored
  - Use analog: how loud to ring (use light to simulate if needed)
    - ATD02 sets for analog *inputs*
    - analog *outputs* come from PWM pins ATP0 & ATP1, so paired but *not* mirrored with inputs